Barbican

Avenue

Metro Modular Avenue offers 8 lengths, starting at 12" and increasing by 12" increments ending in 96". Widths are 3,4,6,8,10,12 " & heights are 3,4,6,8,10,12 "

LED | Health Care | PPE | Flexible | Customizable

Please find an overall listing of all product options. Barbican specializes in producing products on a per request basis. Please feel free to use our online builder to determine conditional options, or confer with your lighting rep, or reach out to sales@barbican.ca for more information.

Modular Component Size	
12L	12" length
24L	24" length
36L	36" length
48L	48" length
60L	60" length
72L	72" length
84L	84" length
96L	96" length

Size		
3W	x	3H
4W		4H
6W		6H
8W		8H
10W		10H
12W		12H

Mounting	
ACW	Aircraft Cable WHITE Power Cord
ACB	Aircraft Cable BLACK Power Cord

End Lens	
MBL	Match Bottom Lens
MFM	Match Front Material

Driver Location	
SCL	Surface Ceiling Location
FCL	Flush Ceiling Location
ACL	Above Ceiling Location

Finish (Canopies, Stems)	
WHT	White
BLK	Black
BA	Brushed Aluminum
RAL	RAL (North American)

Source	
190LM/LF	190LM/LF (2W/LF)
380LM/LF	380LM/LF (4W/LF)
760LM/LF	760LM/LF (8W/LF)

Voltage	
120V	120 Volts
277V	277 Volts

Temperature	
2700K	2700 °K
3000K	3000 °K
3500K	3500 °K
4000K	4000 °K

Colour Rendering Index	
90CRI	90 CRI

Dimming Drivers	
DB(0-10V)	DB(0-10V)

Assembly Type	
SP	Single Pendant
PG	Purpose Gap
NG	No Gap (Premium)

Materials

Choose from our large materials collection using our online product builder.

Laminated Fabrics

Printed Patterns

Natural Wood

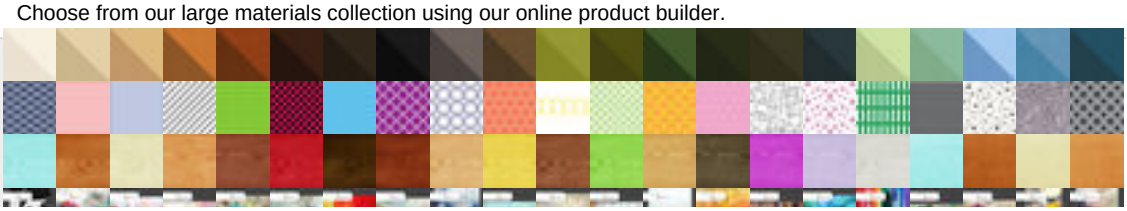

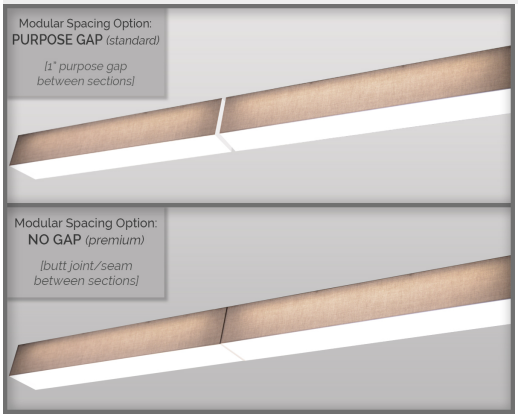

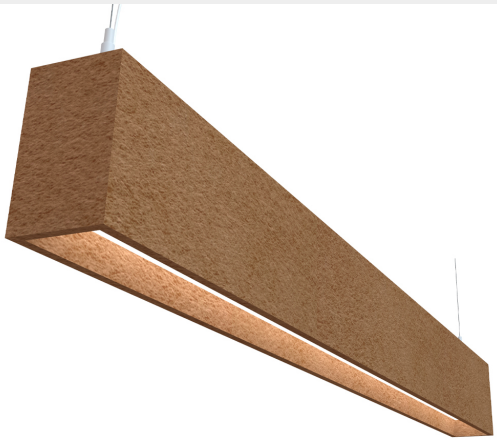

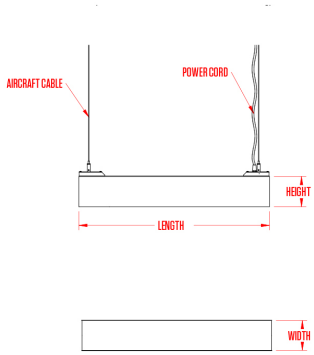

barbican lighting	canada: 479 central avenue | fort erie, ontario | L2A 3T9 usa: 286 elmwood avenue, unit 188 | buffalo, new york| 14222 www.barbican.ca | 800-663-5781 | info@barbican.ca	PRODUCT CODE: 18-S90S PRODUCT NAME: AVENUE CONTACT: sales@barbican.ca